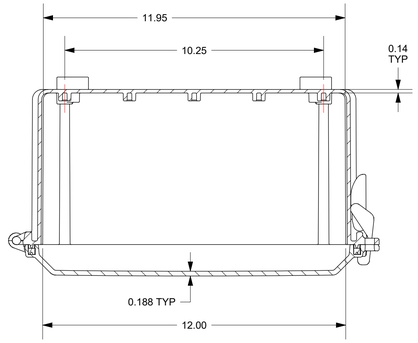

SECTION A-A

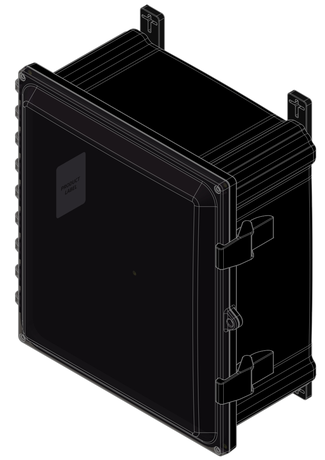

FOR REFERENCE ONLY
MOUNTING FEET SHOWN AS INSTALLED

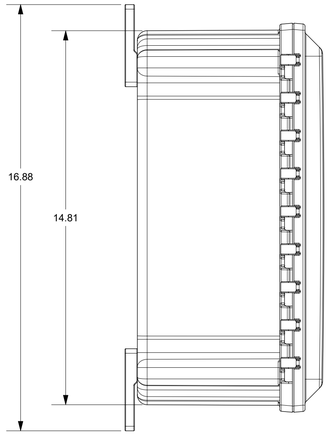

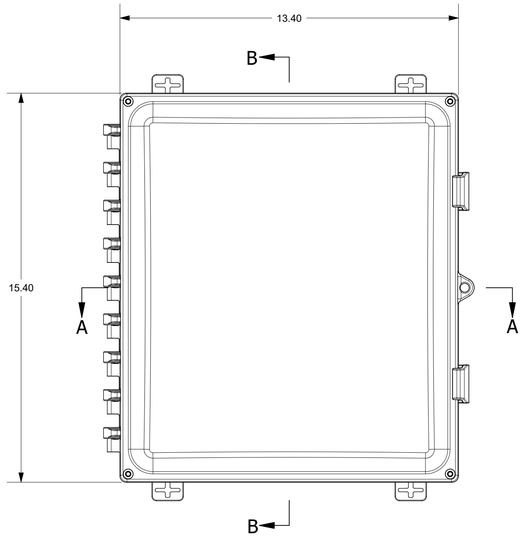

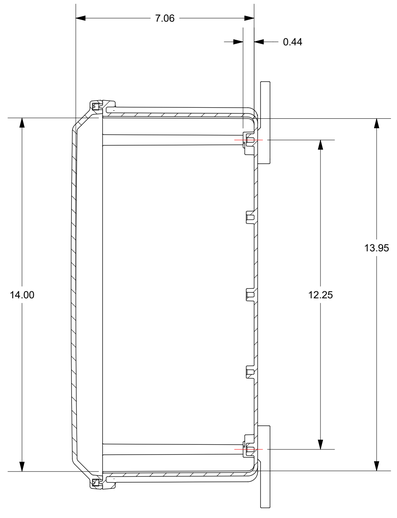

SECTION B-B

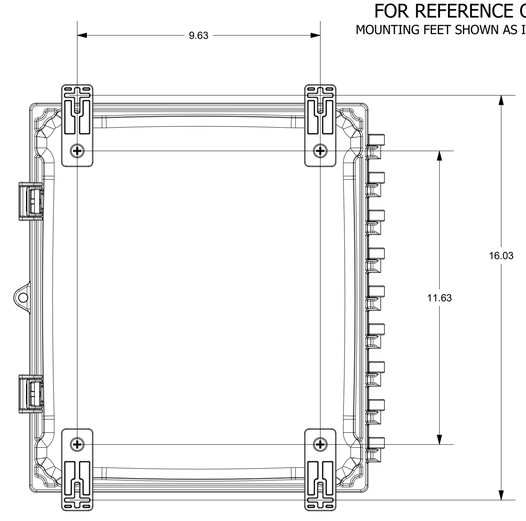



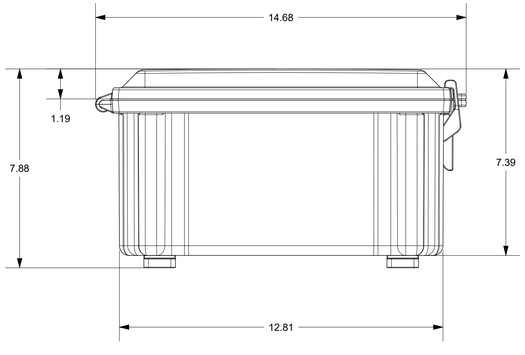

THE INFORMATION CONTAINED IN THIS DRAWING IS THE SOLE PROPERTY OF ROBROY INDUSTRIES. ANY REPRODUCTION IN PART OR WHOLE WITHOUT THE WRITTEN PERMISSION OF ROBROY INDUSTRIES IS PROHIBITED. ALL RIGHTS RESERVED UNDER THE COPYRIGHT LAWS. COPYRIGHT © 2025 ROBROY INDUSTRIES. ROBROY INDUSTRIES VALUES AND PROTECTS ITS INTELLECTUAL PROPERTY. FOR MORE INFORMATION VISIT www.robroy.com/patents

SPECIAL REQUIREMENTS

ASSEMBLY:
1. (1) POLYCARBONATE ACCESSORY KIT (**WPPCACCKITR03**) SHALL BE PACKAGED LOOSELY INSIDE ENCLOSURE

NEMA 250 TYPE: 1, 3R, 4, 4X, 6P, 12	IEC 60529: IP66, IP68	STANDARD P/N: BK-AH14126C	
COLOR: BLACK POLYCARBONATE	COLOR STANDARD: N/A	CUSTOMER DWG:	
MATERIAL: POLYCARBONATE			

ALL DIMENSIONS ARE IN **INCHES** UNLESS OTHERWISE SPECIFIED

TOLERANCES UNLESS SPECIFIED: .XX ± 0.03, .XXX ± 0.010

REVISION HISTORY

REV	DESCRIPTION	DATE	ENG
1	-	-	-

STAHLIN — A ROBROY ENCLOSURES™ BRAND

Robroy Enclosures
500 Maple Street
Belding, Michigan 48809
Phone: 616-794-0700
Fax: 616-749-3378

DRAWN BY: JWH	DATE: 12/16/25	CUSTOMER:	DRAWING: BK-AH14126C
SCALE: DO NOT SCALE	DESCRIPTION: STANDARD ENCLOSURE		PART NUMBER: BK-AH14126C



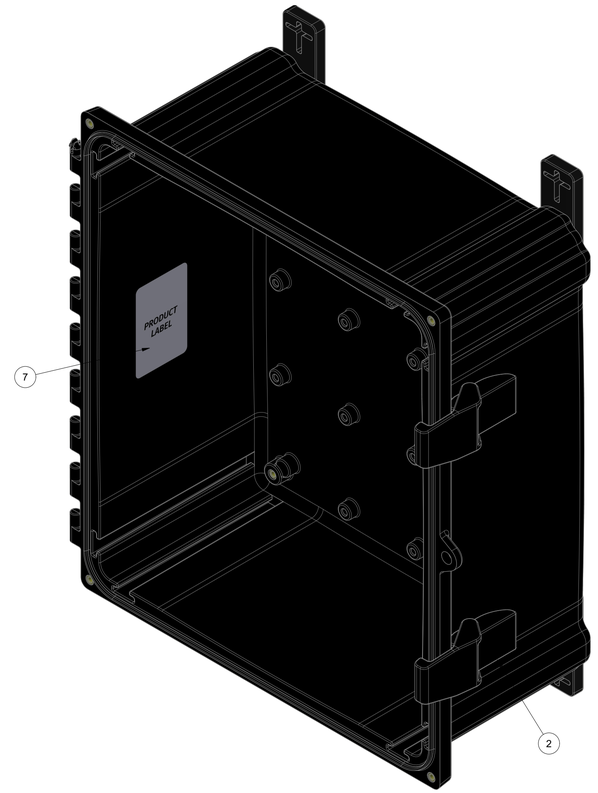



BACK SIDE
(1) MOUNTING FOOT REMOVED FOR CLARITY
TORQUE SCREWS TO 10-14 IN.-LBS.

PARTS LIST			
ITEM	QTY	PART NUMBER	DESCRIPTION
1	1	WPPC14126BOXR03	14X12X6 BLACK POLYCARBONATE BOX
2	2	RMAHLATCH-201	PC AH LATCH - BLACK
3	1	WPPCC14126U	STANDARD COVER ASSEMBLY
4	1	WPPCACCKITR03	BLACK POLYCARBONATE ACCESSORY KIT
5	1	RMINSTGBL	GROUNDING INSTRUCTION SHEET
6	1	RMLABBLANK4X3	100005 BLANK LABEL
7	1	RMLABBLANK3x2	100020 BLANK LABEL
8	1	RMCTN21027	CARDBOARD BOX FOR 14X12X6 POLYCARBONATE

THE INFORMATION CONTAINED IN THIS DRAWING IS THE SOLE PROPERTY OF ROBROY INDUSTRIES. ANY REPRODUCTION IN PART OR WHOLE WITHOUT THE WRITTEN PERMISSION OF ROBROY INDUSTRIES IS PROHIBITED. ALL RIGHTS RESERVED UNDER THE COPYRIGHT LAWS. COPYRIGHT © 2025 ROBROY INDUSTRIES. ROBROY INDUSTRIES VALUES AND PROTECTS ITS INTELLECTUAL PROPERTY. FOR MORE INFORMATION VISIT www.robroy.com/patents

SPECIAL REQUIREMENTS

NEMA 250 TYPE: 1, 3R, 4, 4X, 6P, 12	IEC 60529: IP66, IP68	STANDARD P/N: BK-AH14126C	
COLOR: BLACK POLYCARBONATE	COLOR STANDARD: N/A	CUSTOMER DWG:	
MATERIAL: POLYCARBONATE			

ALL DIMENSIONS ARE IN **INCHES**
UNLESS OTHERWISE SPECIFIED

TOLERANCES	.XX	.XXX
UNLESS SPECIFIED	± 0.03	± 0.010

STAHLIN
A ROBROY ENCLOSURES™ BRAND

Robroy Enclosures
500 Maple Street
Belding, Michigan 48809
Phone: 616-794-0700
Fax: 616-749-3378

DRAWN BY	DATE	CUSTOMER	DRAWING
JWH	12/16/25		BK-AH14126C

SCALE	DESCRIPTION	PART NUMBER
DO NOT SCALE	STANDARD ENCLOSURE	BK-AH14126C