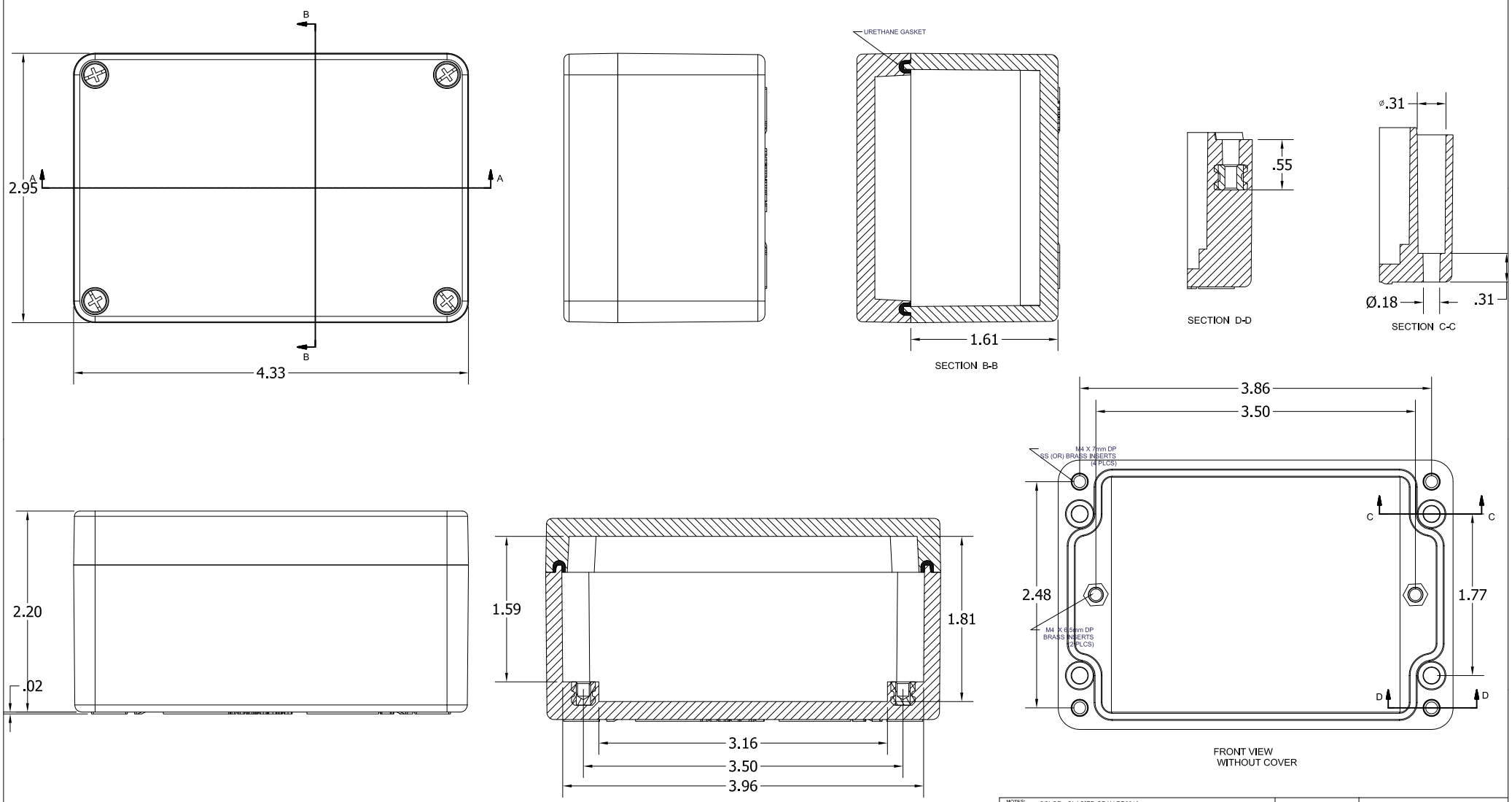

NOTES:	COLOR : GLACIER GRAY RR3013				ALL DIMENSIONS ARE INCHES (MILLIMETERS) UNLESS SPECIFIED	TOLERANCES .XX ± 0.03 (0.79) UNLESS SPECIFIED .XXX ± 0.010 (0.25)	
	UL/CSA TYPE 1, 3, 3S, 4X, 6, 6P, 12; IEC IP66, IP67, IP68						
MATERIAL	F.R. POLYESTER FIBERGLASS			DR. BY DEVI	DATE 9/12/2007	STAHLIN ENCLOSURES DIVISION OF ROBROY INDUSTRIES	BELDING, MICHIGAN 48809
LTR	REVISION RECORD	DATE	BY	CHD	CHK. BY	DATE	
-	-	-	-	-			
-	-	-	-	-	APD. BY	DATE	CUSTOMER
-	-	-	-	-			SHT 1 OF 1
-	-	-	-	-	DO NOT SCALE		PART NAME
-	-	-	-	-			PART NO. D342W

THIS DRAWING AND THE INFORMATION HEREON ARE OUR PROPERTY AND MAY BE USED BY OTHERS ONLY AS AUTHORIZED BY STAHLIN ENCLOSURES, DIVISION OF ROBROY INDUSTRIES ALL RIGHTS RESERVED UNDER THE COPYRIGHT LAWS