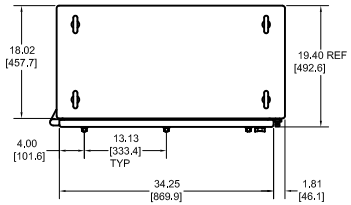

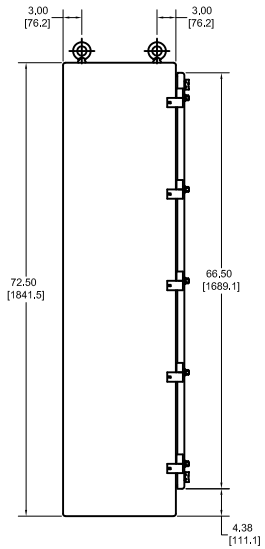

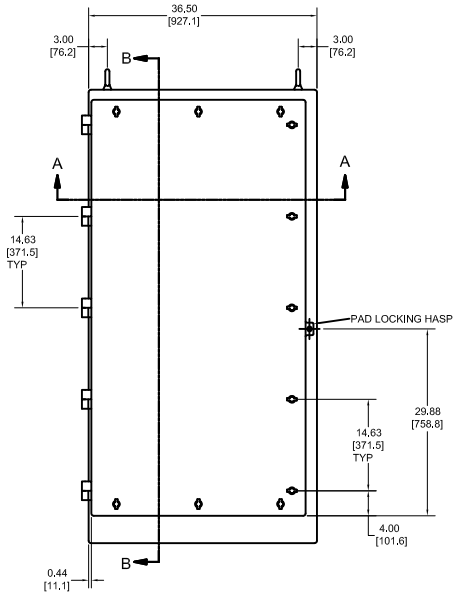

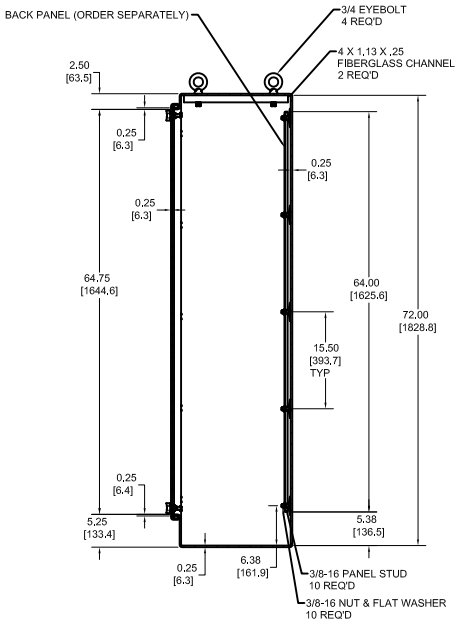

SECTION B-B

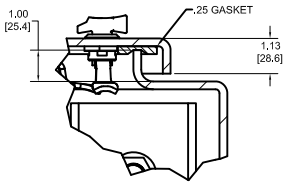

DETAIL A
SCALE 1 / 2

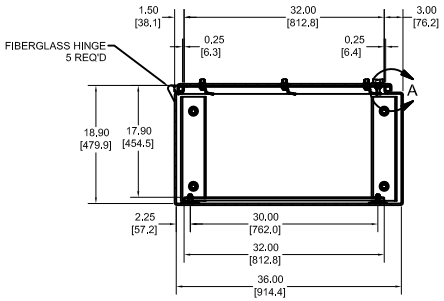

SECTION A-A

INSTALLATION OF QUATER-TURN LATCHES.

1) USE ONLY CERTIFIED QUARTER-TURN ASSEMBLIES. CERTIFIED ASSEMBLIES MUST BE MARKED ON THE CAM FOR TORQUE VERIFICATION.
2) INSTALL QUARTER-TURN INTO MOUNTING HOLE CORRECT ORIENTATION.
3) OPERATOR #1 TO TORQUE HOUSING NUT TO 70 IN/LBS WITH BREAKING TORQUE WRENCH.
4) OPERATOR #1 IS TO MARK COVER VERIFYING THAT HOUSING NUT HAS BEEN TORQUED TO 70 IN/LBS.
5) OPERATOR #2 IS TO VERIFY HOUSING NUT TORQUE IS 70 IN/LBS WITH BREAKING TORQUE WRENCH.
6) OPERATOR #2 APPLIES SILICONE ACROSS THREADS OF THE HOUSING AND ON TO HOUSING NUT.
7) VERIFY DIRECTION OF TURN IS CLOCKWISE TO LOCKING (CLOSED) POSITION.
8) LOCK ALL QUATER-TURNS IN CLOSED POSITION BEFORE SHIPPING.

HOUSING NUT TOLERANCE: 65 TO 75 IN/LBS
CAM NUT TOLERANCE: 16 TO 18 IN/LBS

THIS DRAWING AND THE INFORMATION HEREON ARE OUR PROPERTY AND MAY BE USED BY OTHERS ONLY AS AUTHORIZED BY STAHLIN ENCLOSURES, A DIVISION OF ROBROY INDUSTRIES AND ARE PROTECTED UNDER THE COPYRIGHT LAWS

NOTES: UL TYPE 4X, IEC IP66, WALL THK. 1/4

EXTERIOR & INTERIOR GLACIER GRAY

MATERIAL

LET.	REVISION RECORD	DATE	BY	CHD.

DR. BY ENT/PM	DATE 9/25/2006
CHK. BY	DATE
APD. BY	DATE
SCALE 1/10	

ALL DIMENSIONS ARE INCHES (MILLIMETERS) UNLESS SPECIFIED

TOLERANCES UNLESS SPECIFIED .XX ± 0.13 (3.18) .XXX ± 0.063 (0.794)

STAHLIN ENCLOSURES
DIVISION OF ROBROY INDUSTRIES

BELDING, MICHIGAN 48809

CUSTOMER

PART NAME: ENCLOSURE

PART NO. N723618FSFHLWT