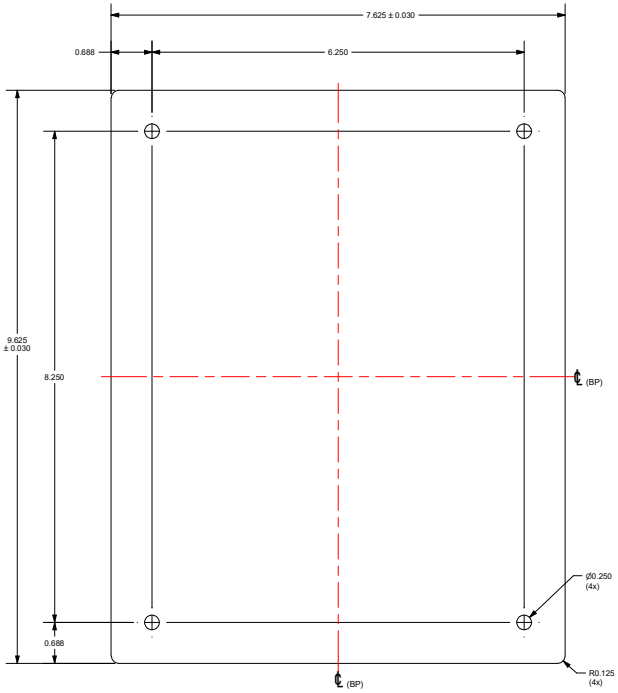

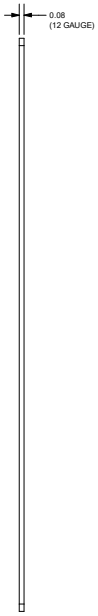

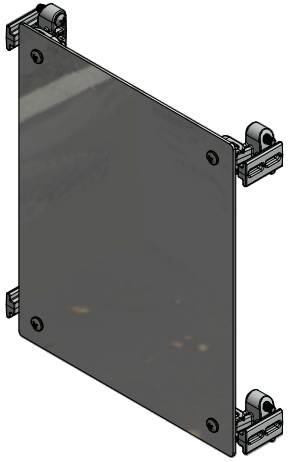

FOR REFERENCE ONLY
SWING PANEL MOUNTS SHOWN AS INSTALLED

NOTES:
1. PANEL SHALL BE FREE FROM BURRS & SHARP EDGES
2. PANEL SHALL BE FLAT
3. MISALIGNED EDGES EXCEEDING 0.005" (STEPS) SHALL NOT BE PERMITTED
4. ALL EDGES SHALL BE SQUARE AND PARALLEL
5. PANEL SHALL HAVE CLEAR PVC FILM ON ONE SIDE
6. ALL "2424" SIZE PANELS AND BELOW SHALL BE PACKAGED IN AN ENVELOPE WITH NO METAL (CLASP)
7. ALL "3020" SIZE PANELS AND ABOVE SHALL BE PACKAGED IN CARDBOARD WITH NO METAL (STAPLES)

SPECIAL REQUIREMENTS

ASSEMBLY:
1. SWING PANEL KIT INCLUDES THE FOLLOWING:
   -(1) ALUMINUM SWING PANEL
   -(1) SWING PANEL MOUNT KIT (FEPCSPMK)

THIS DRAWING IS THE SOLE AND EXCLUSIVE PROPERTY OF ROBROY ENCLOSURES. NO PART OF THIS DRAWING MAY BE REPRODUCED OR TRANSMITTED OR PUBLICLY DISPLAYED IN ANY FORM OR BY ANY MEANS WITHOUT THE EXPRESS WRITTEN PERMISSION OF ROBROY ENCLOSURES. ALL RIGHTS RESERVED UNDER THE COPYRIGHT LAWS. COPYRIGHT © 2016 ROBROY ENCLOSURES

NEMA 250 TYPE: N/A	STANDARD P/N: PC1008SPK	ALL DIMENSIONS ARE IN INCHES UNLESS OTHERWISE SPECIFIED	TOLERANCES UNLESS SPECIFIED .XX ± 0.03 .XXX ± 0.010
EN 60529: N/A			
COLOR: N/A	CUSTOMER DWG:		
COLOR STANDARD: N/A			
MATERIAL: 3003-H14 ALUMINUM			

REVISION HISTORY

REV	DESCRIPTION	DATE	ENG.
-	-	-	-
-	-	-	-
-	-	-	-
-	-	-	-
-	-	-	-
-	-	-	-

STAHLIN
www.stahlin.com

Robroy Enclosures
500 Maple Street
Belding, Michigan 48809
Phone: 616-794-0700
Fax: 616-749-3378

DRAWN BY: DRH	DATE: 09/01/16	CUSTOMER	DWG: PC1008SPK
SCALE: DO NOT SCALE		DESCRIPTION: STANDARD SWING PANEL KIT	PART NUMBER: FEPC1008SPK